diMTV

Co-funded by the Erasmus+ Programme of the European Union

# VŠB – Technical University of Ostrava

## Faculty of Electrical Engineering and Computer Science

# DIMTV Project Meeting
# May 15-17, 2018

prof. Dr. Miroslav Voznak
voznak@ieee.org

## Welcome and Introduction

# History of VSB-TU of Ostrava

- The Mining college was founded in Příbram in 1849 by Emperor Franz Josef's Decree
- After World War II, in 1945, the Mining College was moved from Příbram to Ostrava, the center of Czech mining and metallurgy
- After 1989 - three new faculties were established
- First of them The Faculty of Electrical Engineering and Computer Science in 1991

# Structure of VSB-TU of Ostrava

- **As a result of further changes and development, today the university consists of seven faculties:**
  - FMG (since 1849) - Faculty of Mining and Geology
  - FMME (since 1849) - Faculty of Metallurgy and Material Engineering
  - FME (since 1951) - Faculty of Mechanical Engineering
  - FE (since 1977) - Faculty of Economics
  - **FEECS (since 1991) - Faculty of Electrical Engineering and Computer Science**
  - FCE (since 1997) - Faculty of Civil Engineering
  - FSE (since 2002) - Faculty of Safety Engineering
- **and five Institutes:**
  - Nanotechnology Centre
  - Energy Research Centre
  - ENET Centre – Energy Units for Utilization of non Traditional Energy Sources
  - IT4Innovation - National Supercomputing Centre
  - Institute of Environmental Technologies

# Faculty of Electrical Engineering and Computer Science

With its approximately 2,400 students, the Faculty of Electrical Engineering and Computer Science is one of the largest faculties within the VSB - Technical University of Ostrava today

# New Building of FEECS

- FEECS was established on January 1, 1991
- New building was inaugurated on March 20, 2014

# FEECS - Departments and Employees

- Faculty Management - Dean‘s Office
- Department of Electrical Power Engineering
- Department of Electrical Engineering
- Department of Electronics
- Department of Cybernetics and Biomedical Engineering
- Department of Telecommunications
- Department of Computer Science
- Department of Applied Mathematics

- FEECS has 218 employees
  - 14 professors, 40 associate professors , 90 lecturers,
  - 32 researchers and 42 others employees

# Study Programmes and Branches

## Bachelor's Degree

- **Electrical Engineering**
  - Applied Electronics
  - Biomedical Technician
  - Control and Information Systems
  - Electrical Power Engineering
- **Information and Communication Technology**
  - Computational Mathematics
  - Computer Science and Technology
  - Mobile Technology
  - Telecommunication Technology
- **Computer systems for industry of the 21–st century**
- **Automotive Electronic Systems**
- **Designing of Electric Devices** (4 years)

## Follow-up Master's Degree

- **Electrical Engineering**
  - Applied Electronics
  - Biomedical Engineering
  - Control and Information Systems
  - Electrical Power Engineering
- **Information and Communication Technology**
  - Computational Mathematics
  - Computer Science and Technology
  - Mobile Technology
  - Telecommunication Technology
  - Information and Communication Security
- **Designing of electrical systems and technologies**

## Doctoral Degree

- **Electrical Engineering**
  - Electronics
  - El. Machines, Apparatus and Drives
  - Technical Cybernetics
  - Electrical Power Engineering
- **Computer Science, Communication Technology and Applied Mathematics**
  - Computational and Applied Mathematics
  - Informatics
  - Communication Technology

# Support for students

- Faculty offers education to students with special needs.

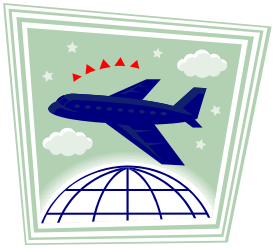

- Faculty financially supports students' trips to foreign universities.

- Faculty supports practical training of students in companies.

# The number of graduates (2017)

| Bachelor Study | | Master Study | |
|---|---|---|---|
| Applied Electronics | 7 | Applied Electronics | 14 |
| Biomedical Technician | 33 | Biomedical Engineering | 36 |
| Electrical Power Engineering | 32 | Electrical Power Engineering | 37 |
| Control and Information Systems | 24 | Control and Information Systems | 24 |
| Computer Science and Technology | 76 | Computer Science and Technology | 78 |
| Mobile Technology | 20 | Mobile Technology | 15 |
| Telecommunication Technology | 32 | Telecommunication Technology | 22 |
| Computational Mathematics | 7 | Computational Mathematics | 7 |
| Designing of Electric Devices | 7 | | |
| In sum | 238 | In sum | 233 |

| PhD Study | |
|---|---|
| Electronics | 0 |
| El. Machines, Apparatus and Drives | 2 |
| Electrical Power Engineering | 1 |
| Technical Cybernetics | 4 |
| Informatics | 3 |
| Communication Technology | 8 |
| Computational and Applied Mathematics | 2 |
| In sum | 20 |

# Research Groups

- The Faculty provides the basis for 27 research groups http://www.fei.vsb.cz/en/research-and-development/research-groups/ which cover many aspects of electrical power engineering, electronic systems, and information technologies

- Each research group ensures education and research activities (e.g. national and international research projects) in the area of its specialization.

- On the platform of Student Grant Agency projects (and projects of other agencies) doctoral and masters students are connected to research activities.

# Research Topics - ICT

- Bioinformatics
- Electronic systems
- Digital Factory – Industry 4.0
- Internet of Things
- Math Modelling
- Electrical Power Engineering
- Electrical and Electronic Engineering
- Telecommunications
- Optics
- Computer Science
- Biomedical Engineering

# Information and Communication Technology


**Disaster management**

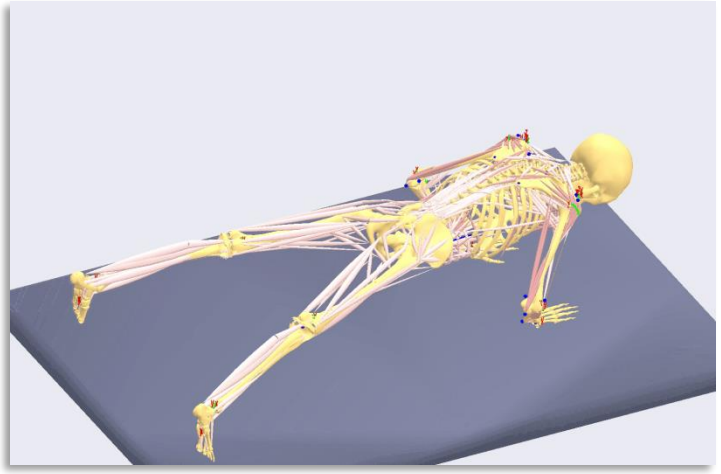

**Modeling and simulation in biomechanics**

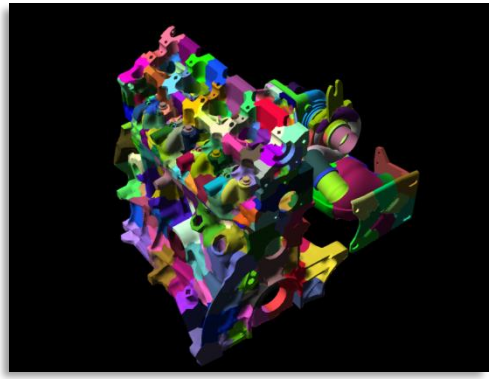

**Simulation of engine F1**

Microsoft IT Academy Program

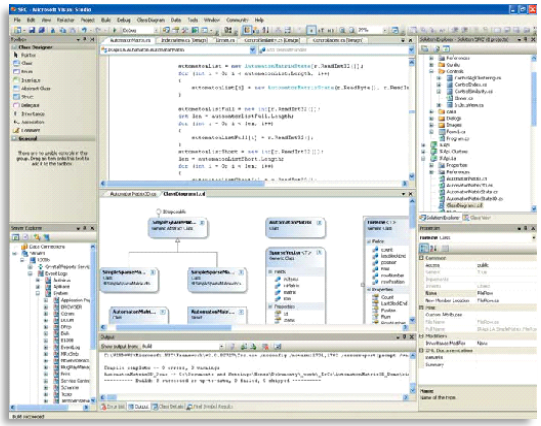

# Electrical Engineering

## Hydrogen-powered vehicle


## Electric vehicle drive

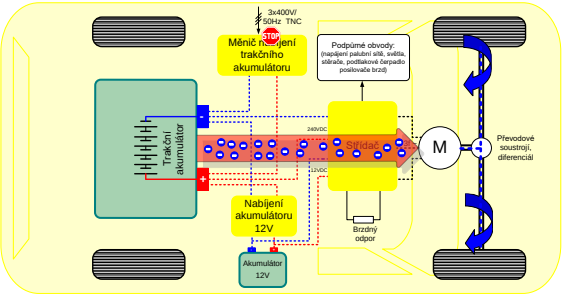


## Small wind power plant

## Measurement of biophysical parameters

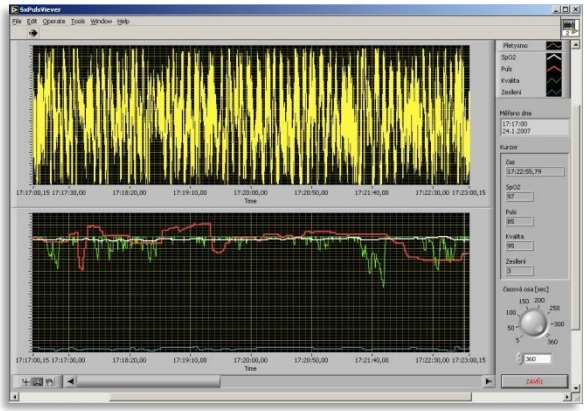

## Control system for ultralight aircraft

# Electrical Engineering

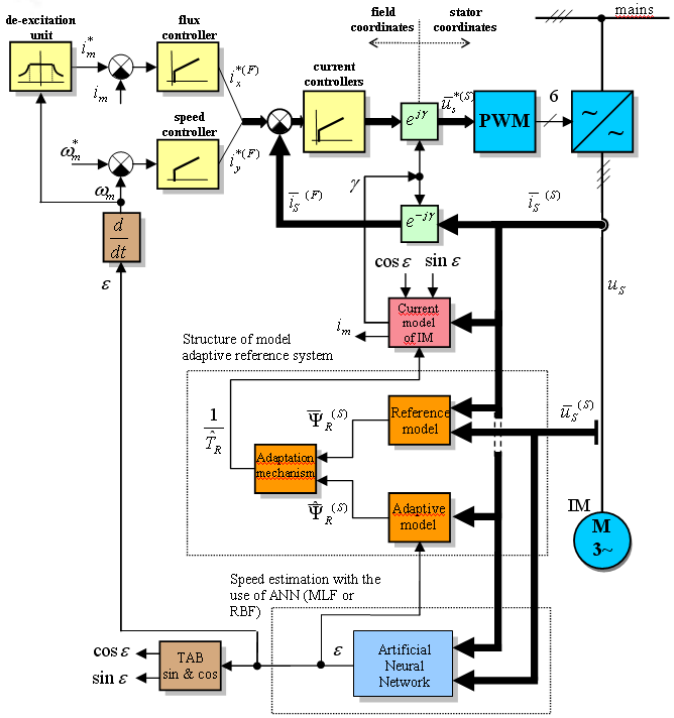



## E-Cars

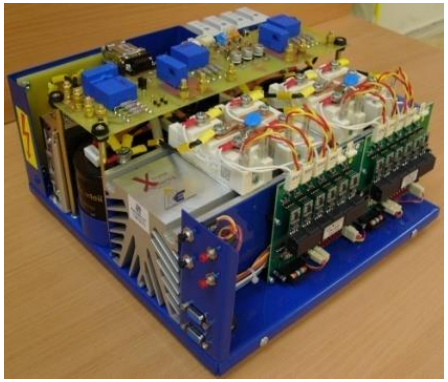

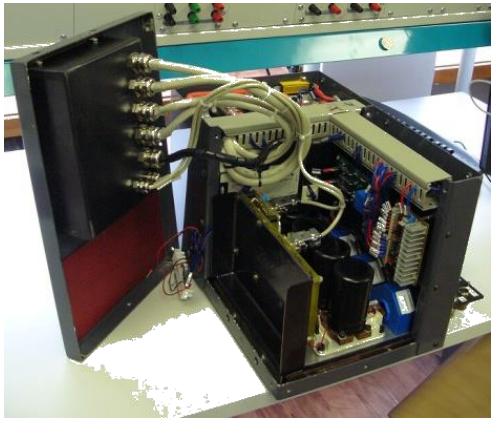

## Power Converters

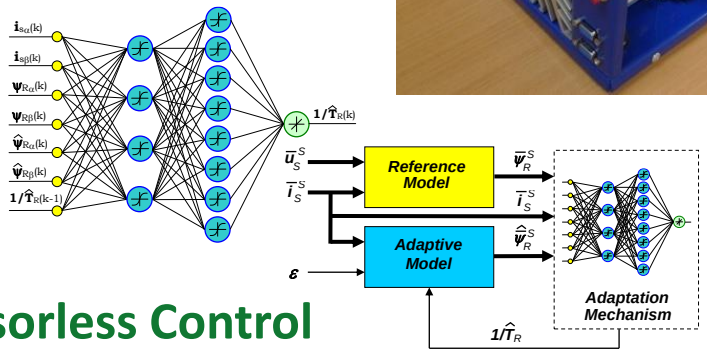


## AC Drive with Sensorless Control

# Research and development activities

- FEECS puts a strong emphasis on applied research and development
- The faculty plays a leading role in the research done in collaboration with industry
- FEECS puts a strong focus on the interoperability between the traditional industrial research areas such a mining, metallurgy, mechanical engineering and new, digital technologies

# FEECS on the way towards Industry 4.0

- FEECS has identified Industry 4.0 as a major opportunity and important factor in transformation process of region industry profile
- FEECS as the only faculty in the Czech Republic preserved connection between Electrical Engineering and Informatics at one faculty
- This gives us great advantage for involvement in Industry 4.0 activities
- We have prepared new accredited study programme called „Computer systems for industry of 21-st century“ and other study programmes answering the needs of modern industry
- Management of FEECS adopted idea of building new special infrastructure for Industry 4.0 education process as a strategic objective

# Planned Industry 4.0 infrastructure

# New FEECS laboratories

- The new building represents an extension of FEECS laboratory infrastructure in three major directions:
  - Industry 4.0 (Smart Factory)
  - Biomedical Engineering (e-Health, Home care)
  - Electronic systems for automotive and electromobility (Autonomous and Electric cars)

# Visualization of planned Industry 4.0 infrastructure

# Structure of new building

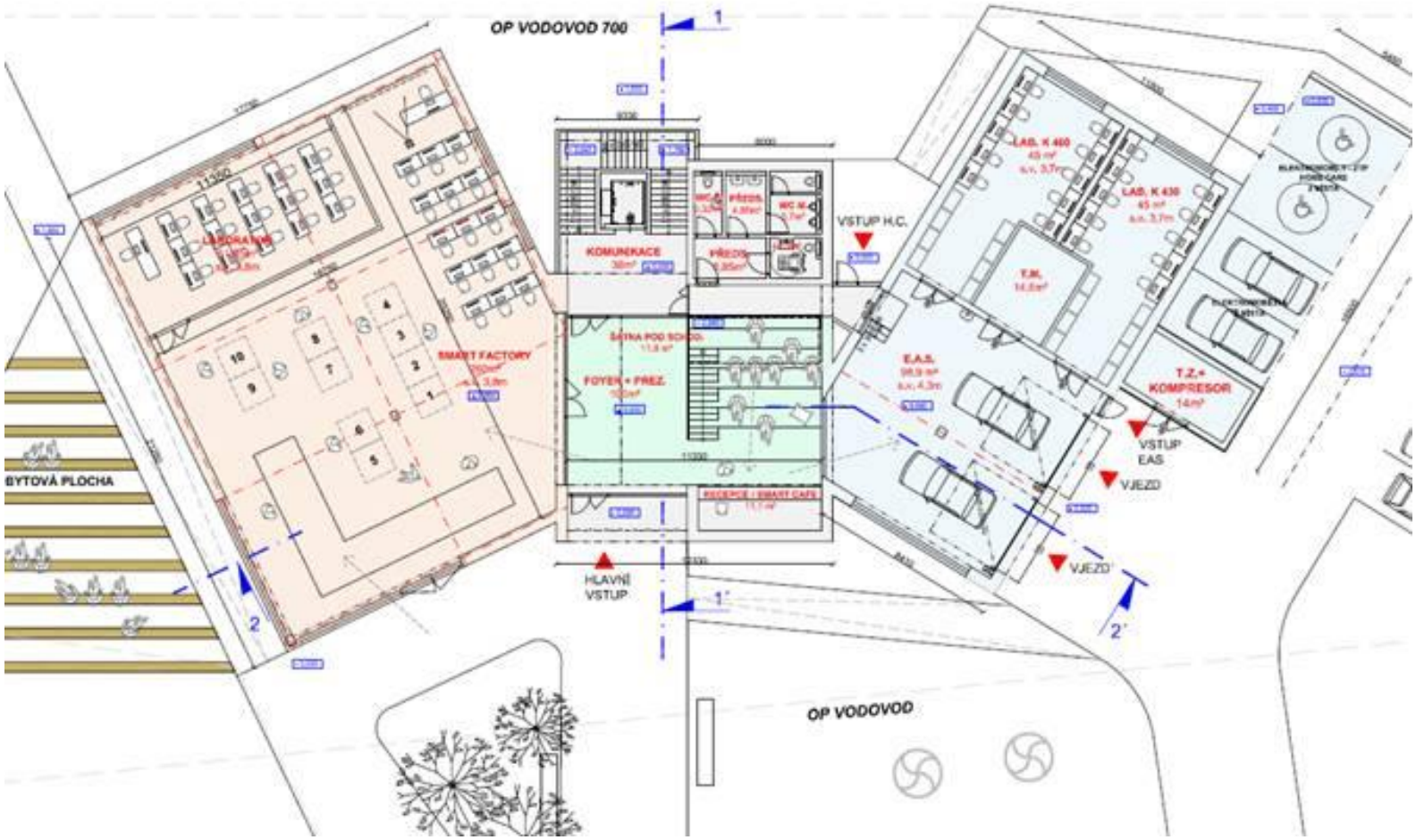

# Thank you for your attention…